REVISIONS						
ZONE	LTR	DESCRIPTION	CHANGE No	DATE	BY	APPR'D
	AA	INITIAL RELEASE	DR47534	29APR14	RMB	BLM
	AB	UPDATED COVERPLATE	DR53394	19AUG15	JMM	BLM

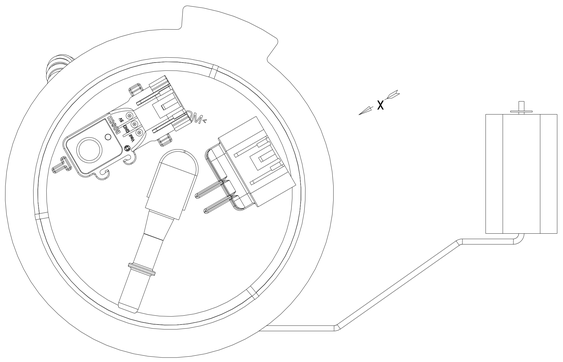

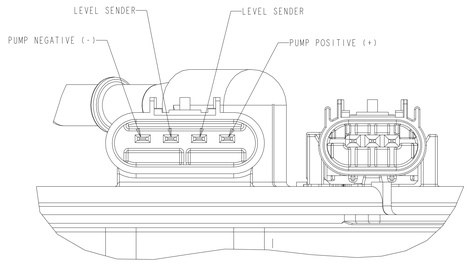

VIEW IN DIRECTION
OF ARROW "X"
SCALE 2:1

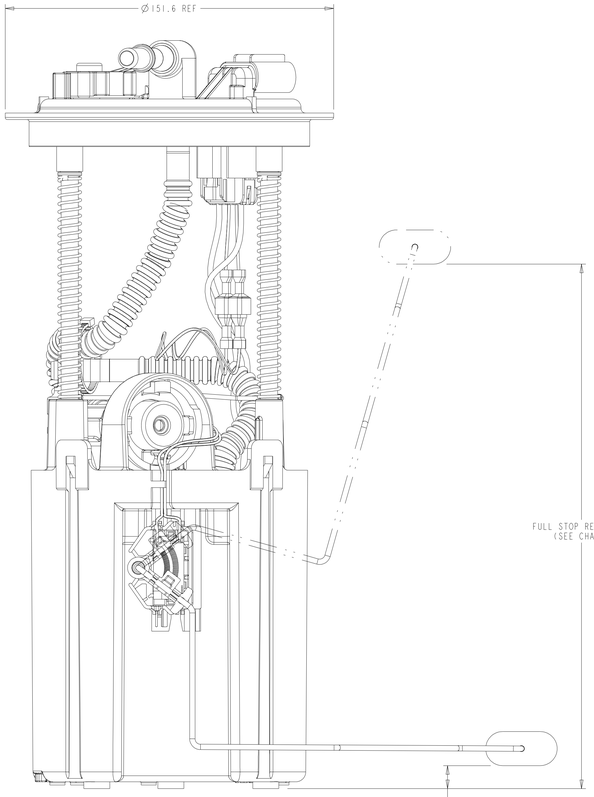

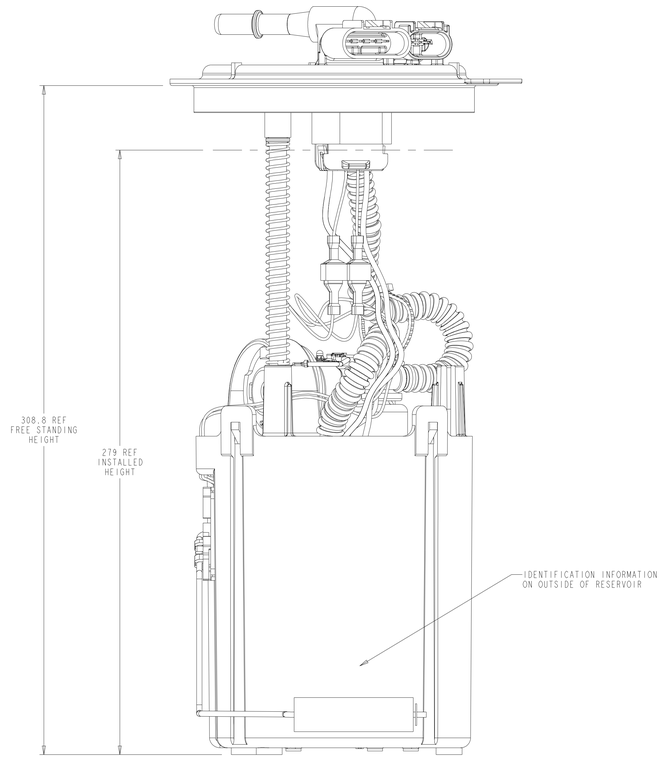

LEVEL SENDER HEIGHT VS. RESISTANCE		
POSITION	HEIGHT	RESISTANCE
FULL STOP	242±1	40±3Ω
EMPTY STOP	11±1	250±3Ω

NOTES:

1. CHANGE IN DESIGN, COMPOSITION, LOCATION OR PROCESSING FROM THE PART PREVIOUSLY APPROVED FOR PRODUCTION REQUIRES PRIOR APPROVAL BY TI AUTOMOTIVE.
2. SPECIAL CUSTOMER PACKAGING REQUIREMENTS MAY CALL FOR THE ADDITION OF SPECIFIC LABELS NOT SHOWN ON THIS DRAWING.
3. SHOWN WIRE ROUTING MAY DIFFER FROM FINISHED PRODUCT.
4. MODULE TO BE PACKAGED USING COMPONENTS NOTED ON BOM SO THAT CONTAMINATION FROM FOREIGN MATERIAL IS PREVENTED:
   - PLUG PROTECTORS ON PORTS
   - POLYBAG

▽ - DENOTES SAFETY CHARACTERISTIC
◊ - DENOTES SIGNIFICANT CHARACTERISTIC
⌖ - DENOTES HIGH IMPACT CHARACTERISTIC

TI AUTOMOTIVE CONFIDENTIAL AND PROPRIETARY
THIS DRAWING IS THE PROPERTY OF TI AUTOMOTIVE AND MAKES CLAIMS PROPRIETARY RIGHTS IN THE SUBJECT MATTER SHOWN AND DESCRIBED ON THIS DRAWING AND RETAINS ALL INTELLECTUAL PROPERTY RIGHTS THEREIN. THIS DRAWING IS DISCLOSED TO RECIPIENT UNDER THE EXPRESS CONDITION THAT IT WILL BE HELD IN CONFIDENCE. THIS DRAWING SHALL NOT BE DISCLOSED TO OTHERS OR USED FOR THE PURPOSE OF MANUFACTURE OR OTHERWISE EXCEPT WITH THE PRIOR WRITTEN CONSENT OF TI AUTOMOTIVE. THIS DRAWING OR PART THEREOF MAY BE REPRODUCED WITHOUT TI AUTOMOTIVE'S EXPRESS WRITTEN CONSENT. NO LICENSE OR OTHER RIGHT IS GIVEN OR IMPLIED BY THE PROVISION OF THIS DRAWING TO RECIPIENT. COPYRIGHT, TI AUTOMOTIVE 2015. ALL RIGHTS RESERVED.

METRIC
ALL DIMENSIONS ARE IN MILLIMETERS

DO NOT SCALE
DECIMAL TOLERANCES UNLESS OTHERWISE SPECIFIED
ONE PLACE ±0.25 TWO PLACE ±0.13 ANGLES ±1°

THIRD ANGLE PROJECTION

DIMENSIONS IN ACCORDANCE WITH ASME Y14.5 - 2009

TI Automotive
630 COLUMBIA ST.
CARO, MI 48723
+1 989.673.7727

ENGINEER	B.MIDDLETON	23-APR-2014	MATERIAL/SPECIFICATION: N/A
DES.MANAGER			
DESIGNER	R.BRUBAKER	23-APR-2014	
CAD SYSTEM: PROVE	SCALE: 1:1	SHEET NO. 1 OF 1	
REFERENCE (D/REV.): PLM: 00011 2402/AB		PLM REFERENCE/REV.: 2D: AR0036987/AB	
REFERENCE (D/REV.):		PLM REFERENCE/REV.: 3D: AR0036985/AB	

DRAWING NAME: FUEL MODULE ASSEMBLY (AFTMKT LUCERNE, GAS)

SIZE: A0 DRAWING NUMBER: TU4002